OPERATOR'S MANUAL 614306–X

RELEASED: 5–3–94
(REV.A) PSE

614306–X

6 PRODUCT LUBRICATION CONSOLE

REFER TO THE MODEL LIST

DIMENSIONS SHOWN IN INCHES

614306–X MODELS

- 614306 TWO BUCKETS (SHOWN)
- 614306–1 WITHOUT BUCKETS
- 614306–2 SINGLE BUCKET
- 614306–3 WITH ONE TOWEL TRAY
- 614306–4 WITH TWO TOWEL TRAYS

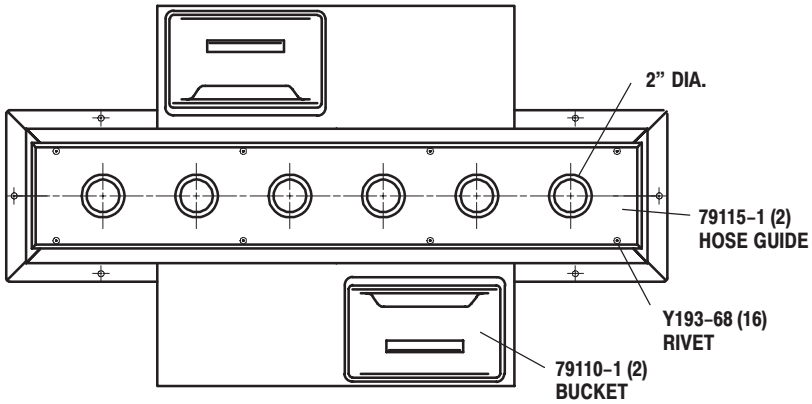

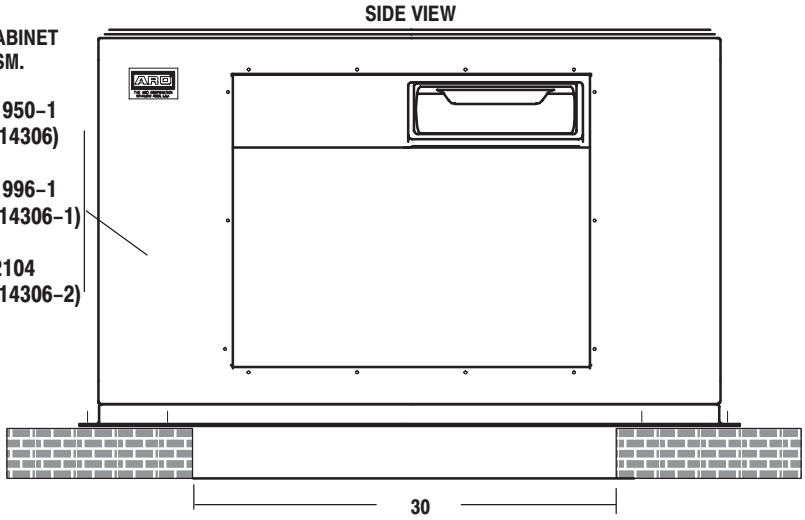

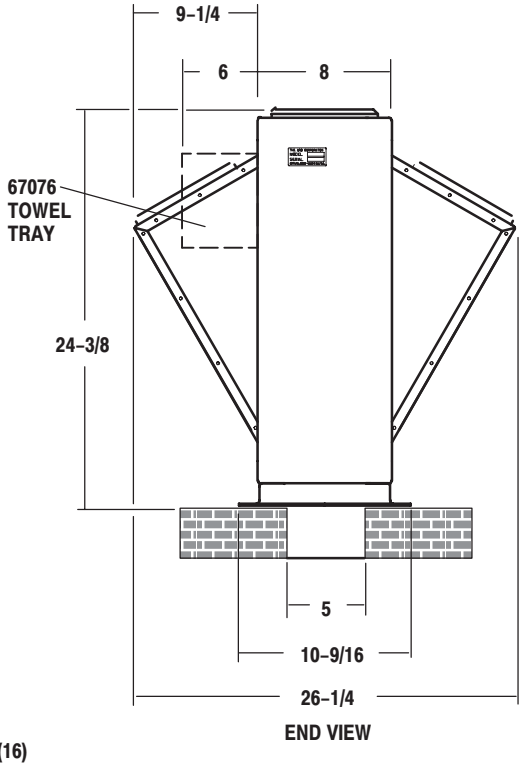

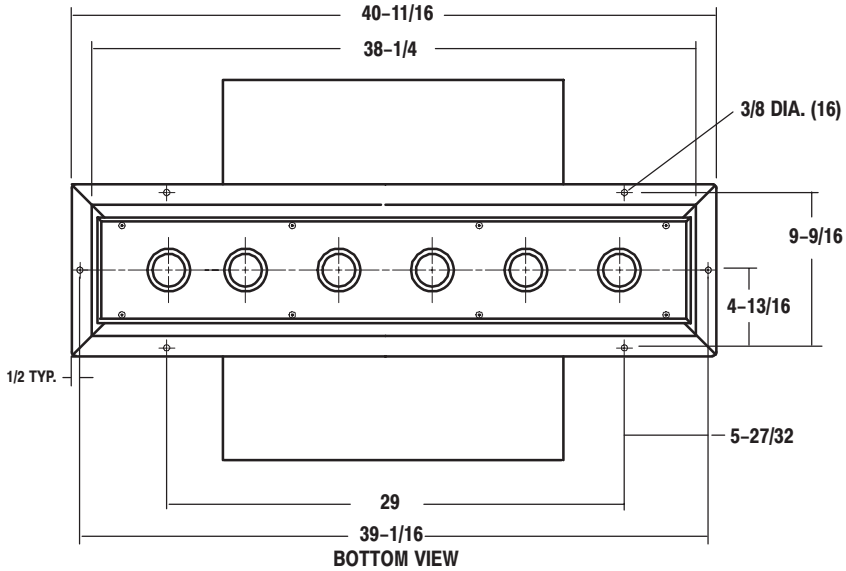

CABINET INSTALLATION

Use the base as a template.

Dimensions are shown for reference only. For best results, locate the Cabinet base in the desired location and use it to determine the floor fastener mounting locations.

67076 TOWEL TRAY

Includes Y334–104–C (5) Self Tapping Screws (1/4 x 1/2)

THE ARO CORPORATION ● ONE ARO CENTER ● BRYAN, OHIO 43506–0151
PH: (419) 636–4242 ● FAX (419) 636–2115

©1994 THE ARO CORPORATION ● PRINTED IN U.S.A.

PN 97999–582

Part of worldwide Ingersoll-Rand